diamond

ECO COOL II
Systemic Misting Machine
Operating Manual

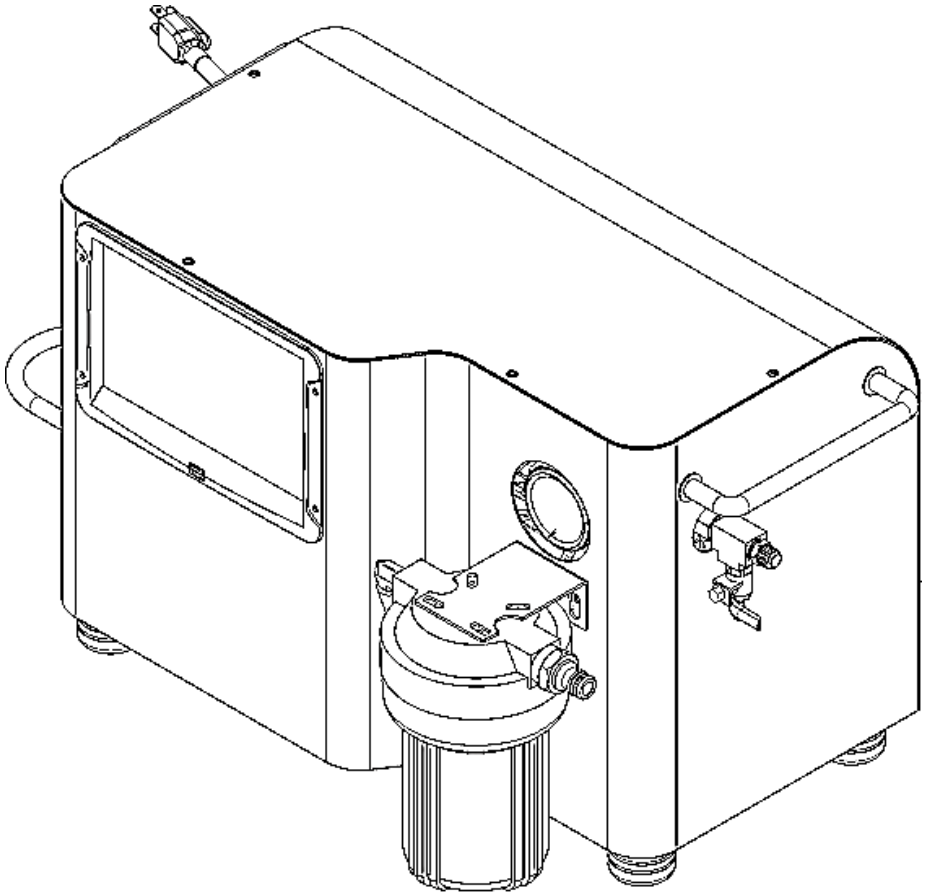

TANONG

Directory

1. GENERAL INFORMATION

This manual provides you with the information for proper use and maintenance of the misting pump. Please, carefully follow the instructions provided. The manufacturer / supplier is not liable for any damage to people or goods, or to the system itself, if the equipment is used differently from as described in this manual.

This manual is provided to the user / technician for correct use of the misting pump. Information provided in this manual does not replace regulations on safety at work currently in force. Therefore, the user should comply with the regulations in the country where the pump is installed, as well as following common sense rules.

Do not use the product if you notice any defect or wear that may compromise the original safety standards. The user or the maintenance technician must report any fault to the supplier. The machine is meant for specific applications. Do not modify and /or use it for applications other than the specified ones.

Instructions, drawings, tables and all the contents of this document are confidential technical documentation and are the exclusive property of **TANONG Precision Technology Co. Ltd.** No information may be released to third parties without written permission by **TANONG Precision Technology Co. Ltd**. Descriptions and images in this document are meant as indications and practical examples. They may be modified at any time and without prior notice. If further technical and functional details are needed, please contact the manufacturer / supplier.

IMPORTANT：

- Please, read the information contained in this booklet since they will provide you with the information and instructions required for safe installation, use and maintenance.
- The manufacturer is not liable for any damage to people or goods, or to the machine itself, if the pump is used differently from that described in this manual.
- Keep this booklet in a safe place and make it available for future reference.
- On delivery, check for any possible damages due to transport

2. SPECIFICATION

ECO Cool Ⅱ			
Model	ECO Cool Ⅱ Systemic Misting Machine		
Max. operating pressure	1000 psi / 70 bar		
Flow rate	1/3 Hp	1750 RPM	• ECO-cool 1 ➡1.3 L/min ≒16 PCs (0.15mm nozzle)
	1/2 Hp		• ECO-cool 2 ➡2.5 L/min ≒31 PCs (0.15mm nozzle)
	3/4 Hp		• ECO-cool 3 ➡3.8 L/min ≒48 PCs (0.15mm nozzle)
	1 Hp		• ECO-cool 5 ➡4.8 L/min ≒48 PCs (0.15mm nozzle)
	1/3 Hp	1450 RPM	• ECO-cool 1 ➡1.1 L/min ≒14 PCs (0.15mm nozzle)
	1/2 Hp		• ECO-cool 2 ➡2.0 L/min ≒25 PCs (0.15mm nozzle)
	3/4 Hp		• ECO-cool 3 ➡3.2 L/min ≒40 PCs (0.15mm nozzle)
	1 Hp		• ECO-cool 5 ➡4.0 L/min ≒50 PCs (0.15mm nozzle)
Motor	Total Enclosed, Single/Three Phase, 4P 110/220 V, 50/60Hz		
DIMENSIONS	L×W×H：572×372×339 mm		
Weight	24~28.5 kg (Depending on the model)		
Standard Components	• Electric Solenoid Valve, Inlet • Electric Solenoid Valve, Outlet • LCD Control Panel • 5” Filter • Drought Switch Sensor • Infrared Transmission Remote Control		
Optional Accessories	• External Control Box (5m, 15m, 20m) • LCD panel Protector		
Power cable	• 3ϕ (PSE)300V,VCT 3.5mm×4C×3.5m • 1ϕ (PSE)300V,VCT 3.5mm×4C×3.5m		
Functions	• Automatic Power-off With Drought Switch • Automatic Power-off When Motor Overload • Temperature & Humidity Surveillance • Total Running Time Recorder • 300 hours Maintenance Reminder • Regulator with Internal By-pass design • Mode 1：15 sec. Misting / 20 sec. Stop • Mode 2：25 sec. Misting / 30 sec. Stop • Mode 3：40 sec. Misting / 40 sec. Stop • Mode 4：Programmable • Mode 5：Weekly cycle set by user • Mode 6：Continuous Misting		
REMARK	⚠ **DANGER** **Forbidden to use outside the house on rainy days**		
	※ **Strongly recommended to add water pressure motor**		

2.1 Dimensions

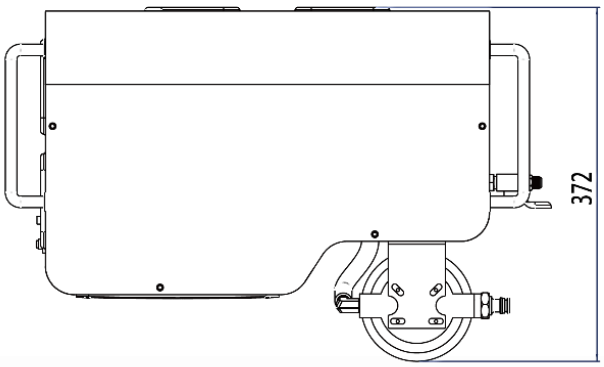

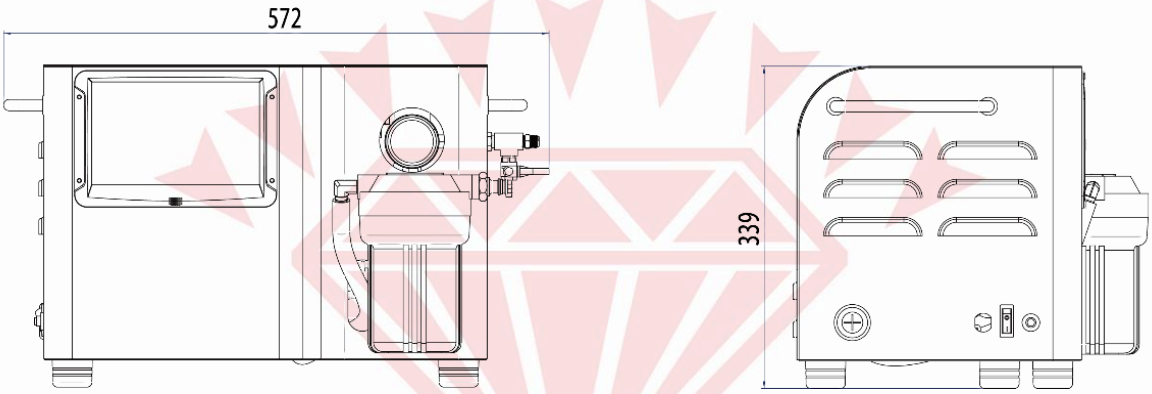

2.2 Identifying the Components

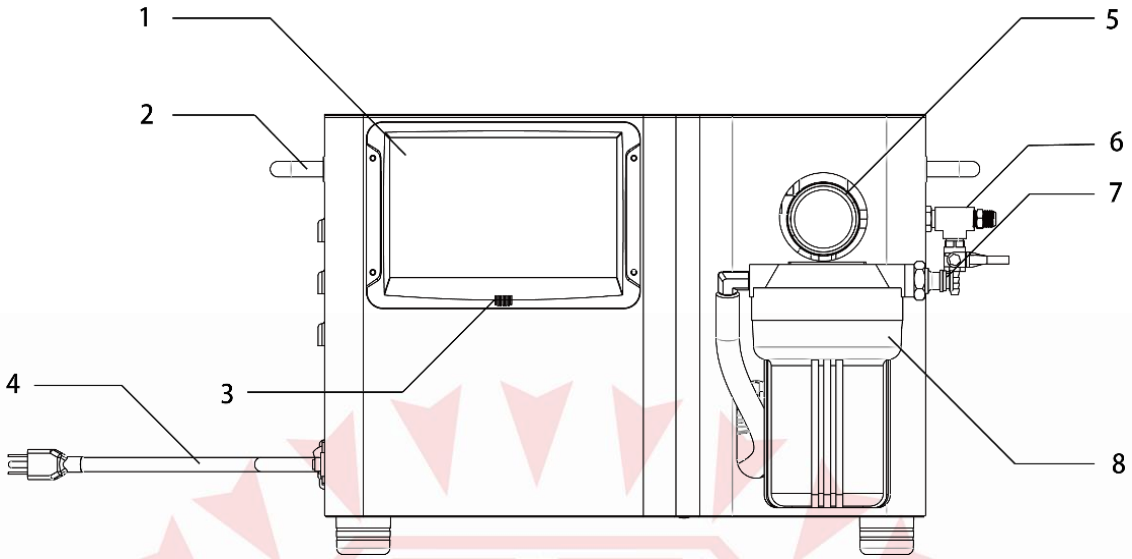

Description of parts			
1	LCD control Panel	5	Pressure Gauge
2	Flip handle	6	PH 1/4 Connector, Outlet
3	Sensor for Temp. & Humidity	7	Quick Coupling, Inlet
4	Power Cable with Plug	8	5” Inlet Water filter

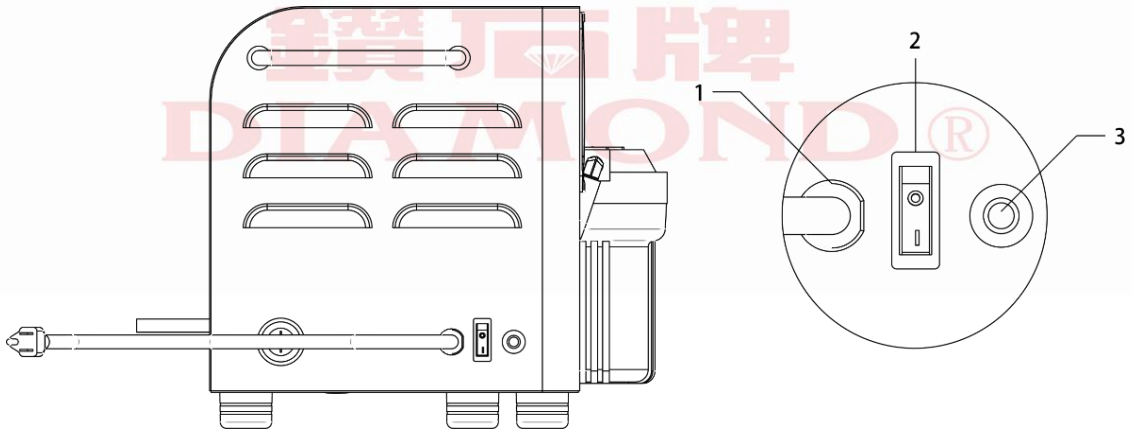

Description of parts			
1	Power Cable Port	3	Overload protector
2	Main Power Button		

2.3 Part drawing

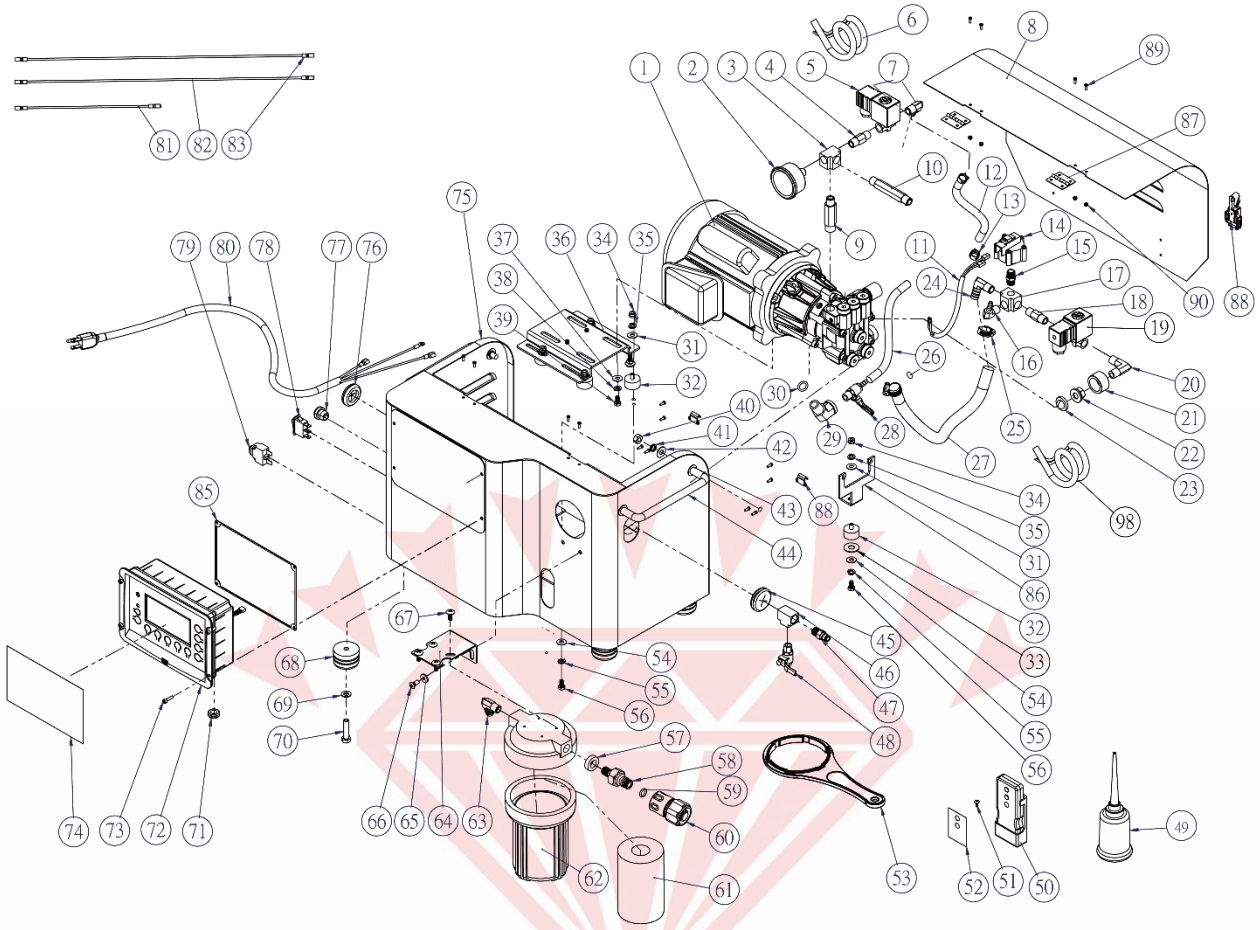

2.4 Part list

Pos.	Parts NO.	Parts Name	Quantity
1	2A-05-0234	NS2 pump	1
	2A-05-0333	NS3 pump	1
	2A-05-0533	NS5 pump	1
2	06-17-0006	Pressure gauge	1
3	059-C405-001	Joint	1
4	06-05-0503	Joint	1
5	A16-IMS9-002	Electromagnetic valve	1
6	11-01-0031	Electric wire set	1
7	06-05-1601	Joint	1
8	03-01-0021A	Frame (Cover)	1
9	059-C183-028	Joint	1
10	059-C183-029	Joint	1
11	11-01-0006	Electric wire set	1
12	A14-C003-100	Delivery hose	1
13	034-0043-000	Clamp	2
14	A16-IMS9-007	Switch	1
15	059-C183-002	Joint	1
16	06-05-1601	Joint	1

Pos.	Parts NO.	Parts Name	Quantity
17	059-C405-001	Joint	1
18	06-05-0503	Joint	1
19	A16-IMS9-003	Electromagnetic valve	1
20	059-C203-002	Joint	1
21	06-02-8001	Nut	1
22	06-05-8002	Joint	1
23	04-06-0004	Packing	1
24	059-C207-002	Joint	1
25	034-0043-000	Clamp	2
26	A03-P002-300	Transparent hose	1
27	A14-C004-011	Delivery hose	1
28	06-18-0007	Switch	1
29	059-C210-001	Joint	1
30	120-1218-000	O-ring	1
31	145-0104-002	Washer	5
32	06-10-0008	Anti-vibration mount	5
33	06-10-0002	Anti-vibration mount	1
34	146-0600-003	Nut	5
35	144-0600-002	Washer	5
36	06-19-0002A	Motor frame	1
37	145-0104-002	Washer	5
38	144-0600-002	Spring washer	5
39	140-0600-016	Screw	5
40	146-0800-001	Nut	4
41	144-0800-002	Spring washer	4
42	145-0800-001	Washer	4
43	145-0800-001	Washer	4
44	05-11-0014	Handle	2
45	11-31-0004	Rubber sleeve	1
46	059-C305-001	Joint	1
47	059-C181-002	Joint	1
48	06-18-0007	Switch	1
49	06-31-0016	Bottle	1
50	11-14-0024	RF Infrared remote control	1
51	142-0400-006	Screw	1
52	11-07-0004	Remote control	1
53	A16-IMS9-A02	Handle	1
54	145-0104-002	Washer	4
55	144-0600-002	Spring washer	4
56	140-0600-007	Screw	4
57	06-15-0010	Washer	1
58	059-C192-004/1	Joint	1
59	120-1117-000	O-ring	1

Pos.	Parts NO.	Parts Name	Quantity
60	059-COM0-001	Quick Connector Hose Fast Fitting	1
61	A16-IMS9-020	Filter element	1
62	A16-IMS9-016	Filter cover	1
63	059-C207-002	Joint	1
64	A16-IMS9-024A	Fixed plate	1
65	145-0104-002	Washer	2
66	142-0600-004	Screw	2
67	148-0508-001	Screw	4
68	018-A000-004	Anti-vibration mount	4
69	145-0800-001	Washer	4
70	140-0800-003	Screw	4
71	11-10-0010	Rubber sleeve	2
72	11-14-0025	Control panel	1
73	140-0400-005	Screw	4
74	11-07-0005	Name plate	1
75	03-01-0022A	Cover	1
76	11-10-0002	Rubber sleeve	1
77	11-10-0011	Power cable port	1
78	11-10-0012	Switch	1
79	11-04-1008	Switch	1
80	11-01-0033	Electric wire set	1
81	11-01-0034		1
82	11-01-0036		1
83	11-01-0035		1
85	04-06-0006	Packing	1
86	03-01-0024	Support frame	2
87	06-14-0010	Hinges	2
88	06-14-0011	Draw latches	16
89	142-0300-008	Screw	16
90	146-0300-002	Nut	1

3. Quick Set-up

3.1 Installation

3.1.1 Unpack the machine

3.1.1.1 Remove the Eco Cool II from the box, and verify all accessories present.

3.1.1.2 Check the machine to see if there is any damage.

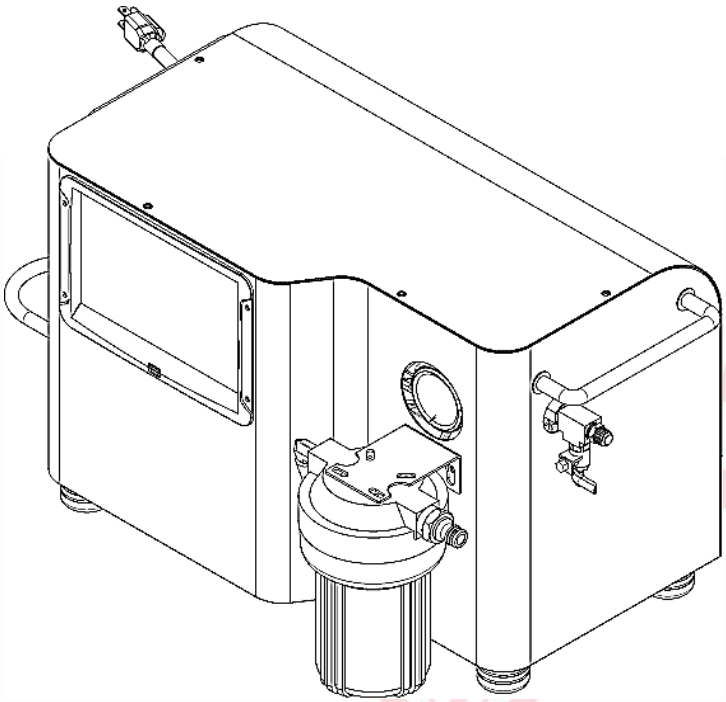

3.1.2 Install the water supply

3.1.2.1 Connect the water inlet connector, lock the water inlet ring, and check whether it is indeed fixed.

3.1.2.2 Connect the water hose to the push-to-connect fitting securely.

3.1.2.3 Connect the hose to a faucet.

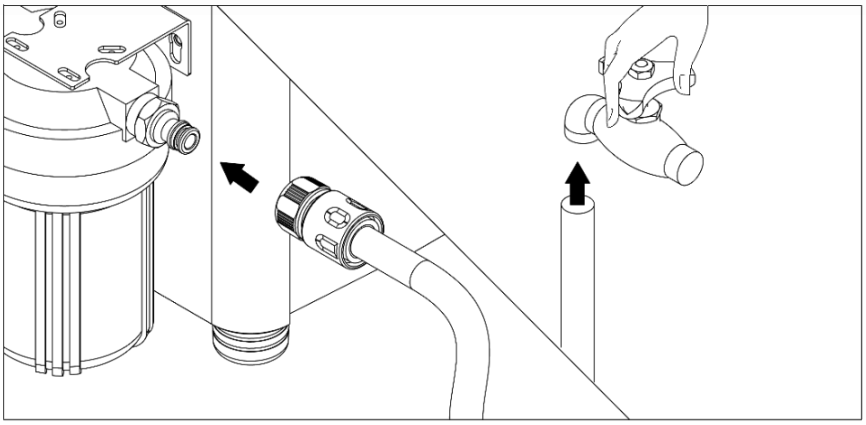

3.1.3 Connect the outlet

3.1.3.1 Connect the PH 1/4”high pressure hose to the PH 1/4”outlet connector fitting on the machine.

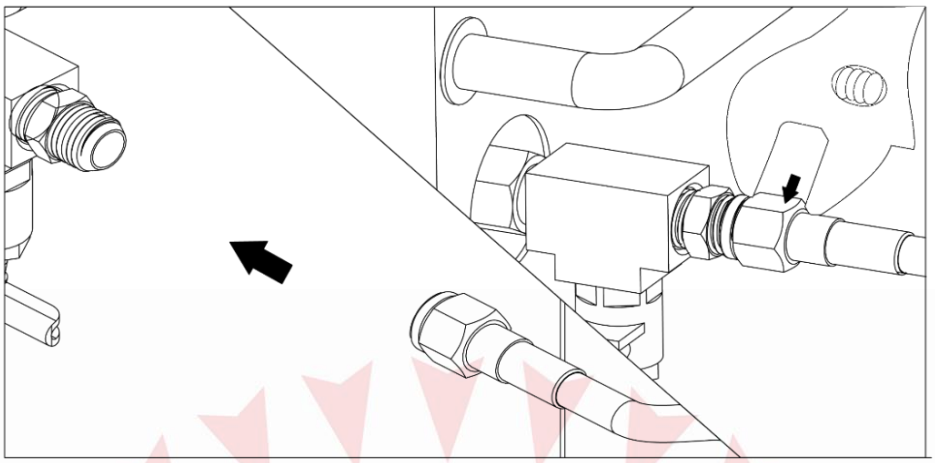

3.1.3.2 The outlet port has an extra vent cock. It is used to vent the air kept inside the pump, so the pump can reach its operating pressure quickly.

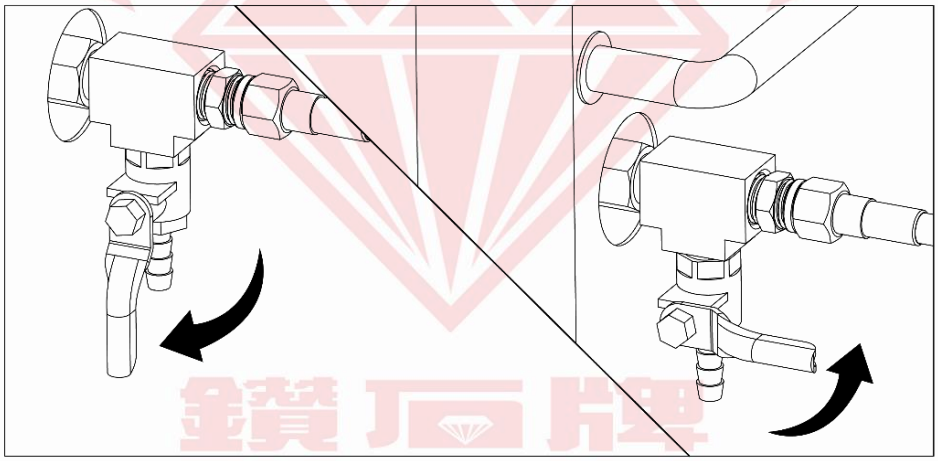

3.1.4 Make sure the voltage and current capability before plug in the power cable into the socket. Push the main power button to “ON”.

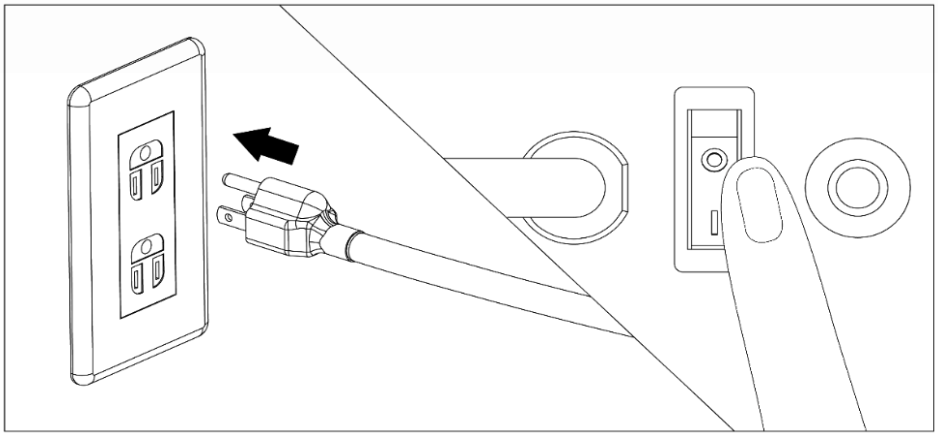

3.2 A Framework Diagram of ECO II

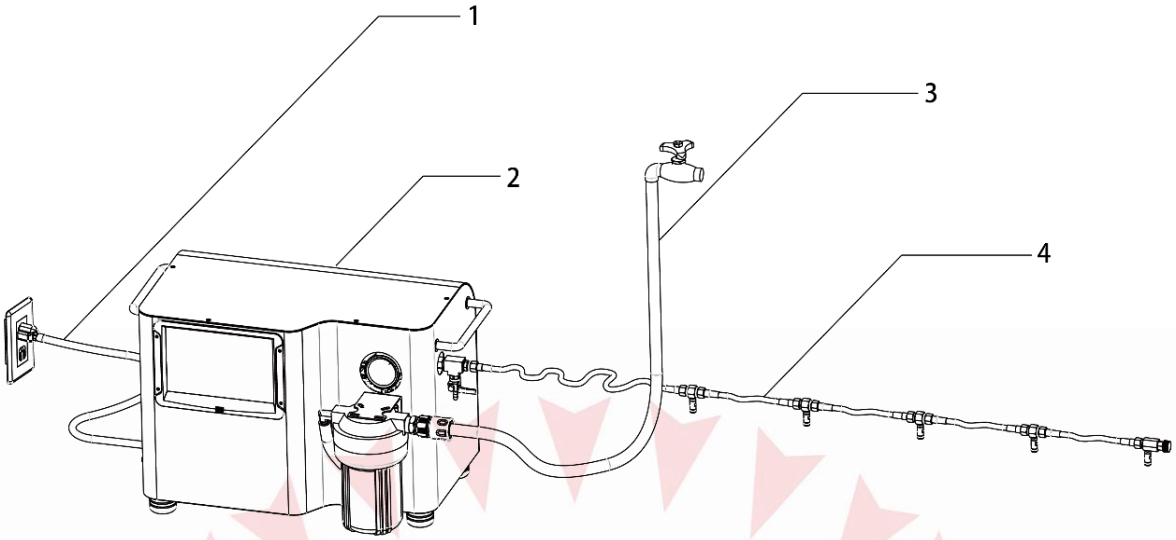

A Framework Diagram of Misting System	
1	Power Cable
2	Eco Cool II Misting Machine
3	Water Supply Hose
4	Nozzle Circuit

3.3 Infrared Transmission Remote Control Guide

Function Key Description of an Infrared Transmission Remote Control	
1	START button
2	STOP button

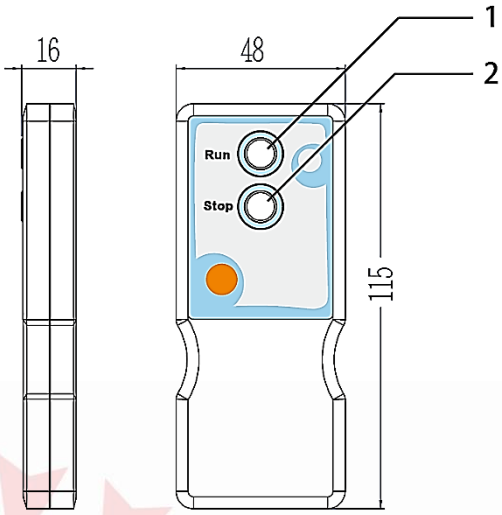

3.3.1 Attach the provided remote control seat onto a wall or other fixed point by screwing it properly.

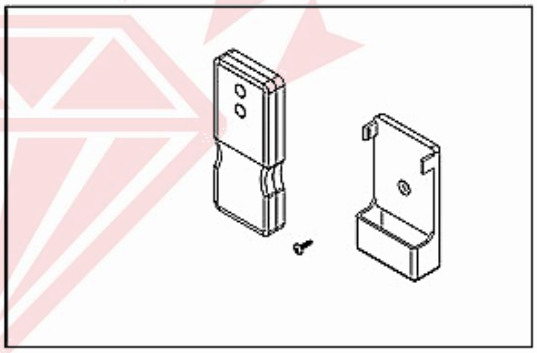

3.3.2 Remove the plastic cover on the back of the remote control unit. Install 2 pieces of AAA dry battery into the unit then put the cover back.

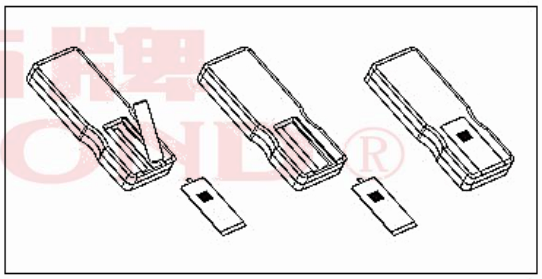

3.3.3 The ideal distance to use the infrared transmission remote control is within 5m.

The function will be influenced seriously by streams light. Users are strongly suggested not to apply this unit under intense sunshine.

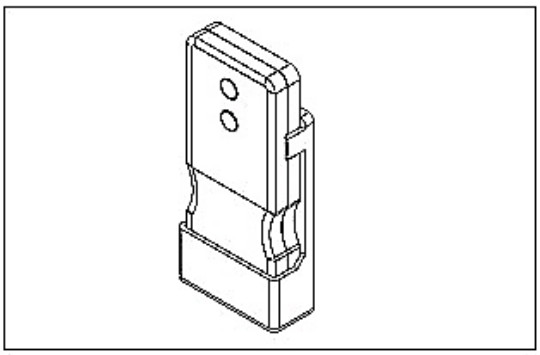

4. Operation Instruction

⚠ DANGER **It indicates that an unfair use can cause possible death or sustain serious injury.**

⚠ WARNING **It indicates that an unfair use may highly cause possible death or sustain serious injury.**

⚠ CAUTION **It indicates that an unfair use may highly wound the user and/or damage the product, also is possible to bring out an unpredictable event.**

4.1 Danger

⚠ DANGER

4.1.1 This machine is forbidden to be used in rainy day.

4.1.2 Only professional engineer or worker are allowed to operate this machine. Children and adults who are not well-trained are forbidden to operate the machine.

4.1.3 Power source shall be equipped with residual current circuit breaker so no one would get an electric shock.

4.1.4 Do not touch or try to move the machine when operator's hands get wet, take off his/her shoes or find any fail electric insulation.

4.1.5 Mount the machine on cement pavers or other solid, flat surface that provide a firm, level supporting. Keep the machine and its surrounding dry and away from fire, so no electric short circuit and fire will occur.er shoes or find any fail electric insulation.

4.1.6 In order to avoid any possible damage and risk, do not operate the machine before study this operating manual carefully.

4.2 WARNING

⚠ WARNING

4.2.1 In order to operate the machine safely, the manufacturer suggests to add one discharge unloader at the end of nozzle circuit. This device will avoid the possible damage to the system and hurt to people when sudden pressure rise occur.

4.2.2 During operating the machine, do not open the cover and touch either the motor or the pump. A possible risk may occur when touch those running parts.

4.2.3 Before running the machine, check whether wires, plug, and hoses are connect well and firmly.

4.3 CAUTION

⚠CAUTION

4.3.1 Do not operate the machine under 0 degrees Celsius, unless anti-freezing agent is applied.

4.3.2 Before starting the machine, please check whether lubrication oil inside the pump is sufficient or not.

4.3.3 Apply only the power source with correct electrical voltage (V), frequency (Hz) and adequate current volume according to machine's specification.

4.3.4 Do not set up the operating pressure of the pump over 1000 psi (70kgf/ cm^2).

4.3.5 Do not run the machine when there is inadequate water come in through inlet port. Insufficient water supply will damage the components inside the pump and shorten the life of the machine seriously.

4.3.6 The water supply hose must be more than 8mm in diameter.

4.3.7 The power cable shall not be longer than 10m, and all extension cable must be bigger than 1.25mm in diameter.

4.3.8 Verify the flow rate for water supply not less than 4 L/min. The water pressure at inlet port shall be higher than 3 bar (may come from pressurized pipe water).

4.3.9 Water temperature shall not exceed 60°C, and must be well-filtered. Suitable water can help to extend the life span of whole misting system.

4.3.10 Before use, check whether the lubrication oil in the pump has deteriorated, and whether all the water inlet pipes, outlet pipes and joints in the circuit are locked firmly.

4.3.11 The number of nozzles for the best mist effect recommended for this model will vary depending on the pump flow rate used. When the number of nozzles used is too small, it will lead to overpressure use, if too many nozzles are used, the pressure will drop and the atomization effect will be poor. Please refer to the catalog specification for details.

4.3.12 A cock installed in the end of misting system is recommended. It will help the system to let go the air inside the pipe when start the machine and reach set pressure as soon as possible. Once the air inside the system is gone, close the cock.

4.3.13 When misting, check all nozzles and ensure none are blocked. If blocked, clean or change it.

4.3.14 When misting, check all pipes and connectors without leaks. If there is leak, reinstall the connector or change the fail one.

4.3.15 For storage in winter, please dry run the machine few seconds. It will help to drain out all water inside the inlet and outlet pipes. Remove the high pressure hose before store this machine.

5. Operating

5.1 Circuit logic diagram

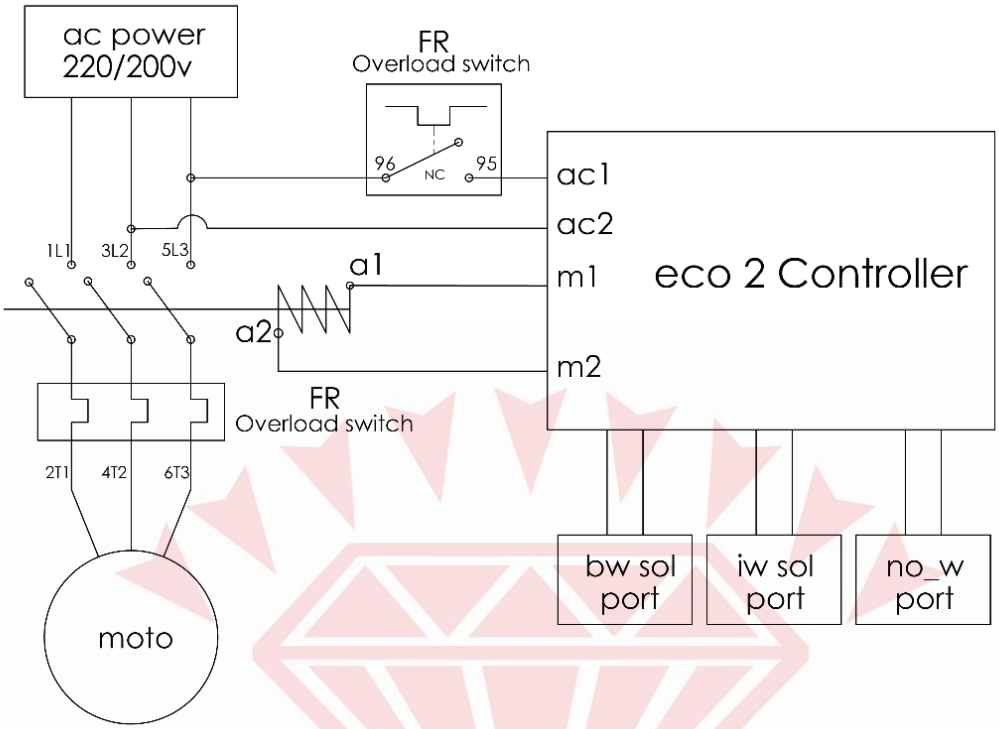

The magnetic switch will shut down automatically if the power is overloaded. The controller will be in standby mode and avoid any output immediately while switch on the power. It will be functioning again after the problem has been fixed.

5.2 The Specification of the PCB Electric Control Box

5.2.1 Adaptable power source include AC 100V-240V, 50Hz or 60 Hz.

5.2.2 Ambient Temperature must be between 0-50°C, and 5% - 95% in relative humidity.

5.2.3 Internal power required is DC 12V.

5.2.4 3 sets of electric relays：

RY1：drives the electric motor.
RY2：drives the inlet solenoid valve.
RY3：drives the by-pass solenoid valve.

5.2.5 Blue back-light LED.

5.2.6 Infrared Transmission Remote Control.

5.2.7 RTC time control, programmable.

5.2.8 6 operating modes available.

5.2.9 Both Celsius and Fahrenheit systems are available.

5.2.10 Detecting function for humidity.

5.2.11 Buzzer for timer.

5.3 Guide of Function Keys on the Control Panel

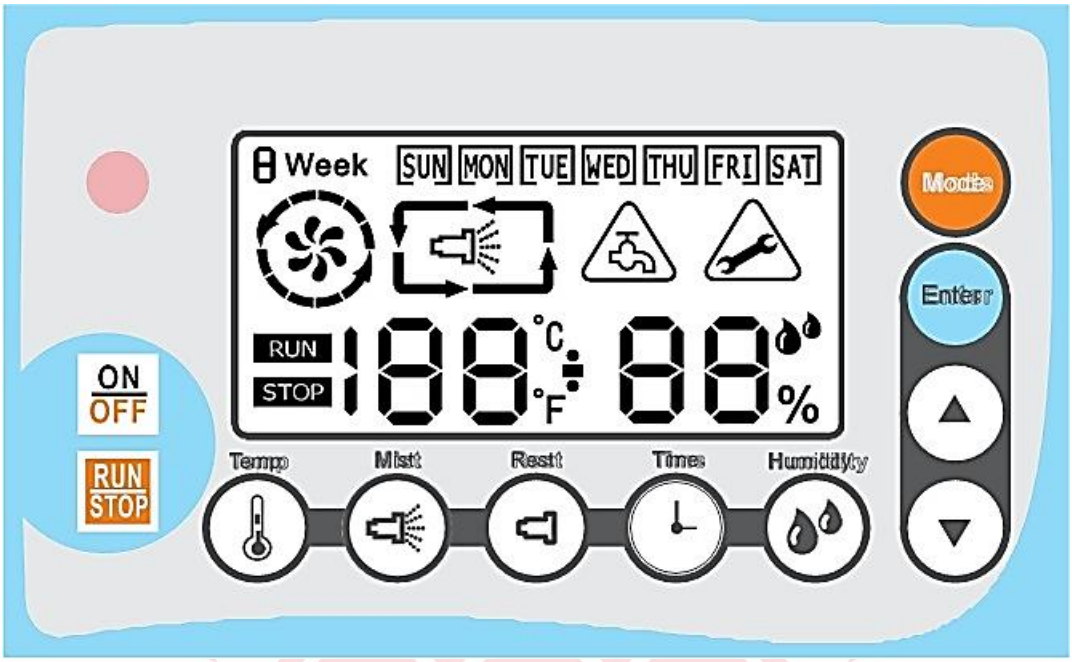

Guide of Function Keys					
1	ON OFF	ON. / OFF for Main Power	7	Humidity	Humidity Control
2	RUN STOP	RUN / STOP the machine	8	Mode	Mode Change Button
3	Temp	Temperature Control	9	Enter	Enter Selected Mode
4	Mist	Mist Activated Time Setting button	10	▲	Up Button for Operating
5	Rest	Rest Time Setting Button	11	▼	Down Button for Operating
6	Time	Timer			

5.4 Introduction of the LCD Monitor

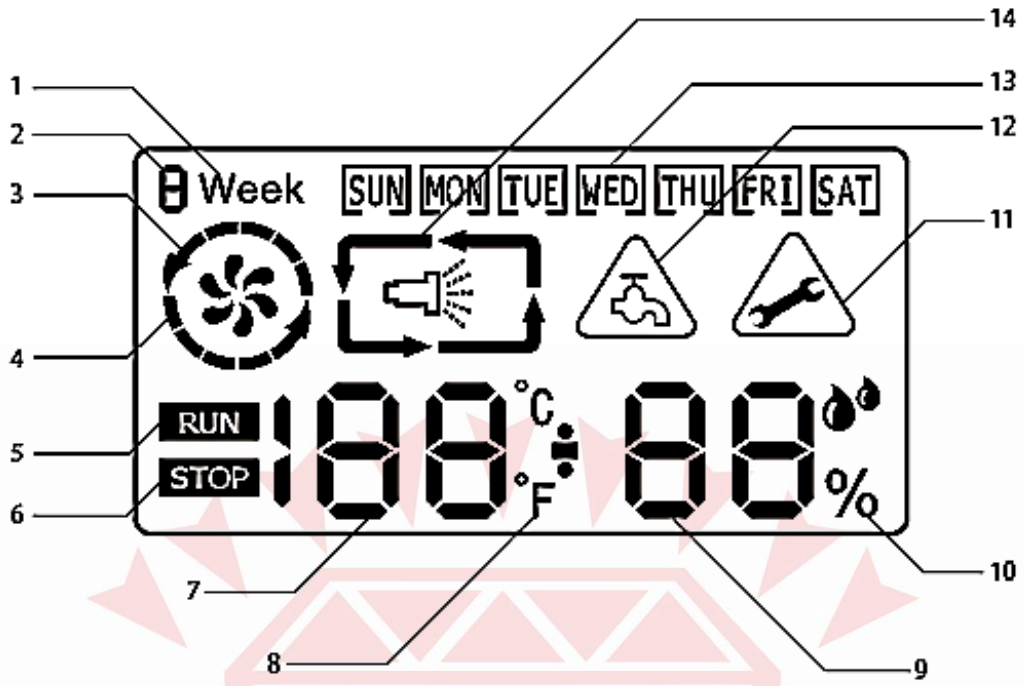

Introduction of the LCD Monitor			
1	Week Schedule	8	Display Celsius / Fahrenheit
2	Display the Mode Selected	9	Numerical Value(Humidity/Time)
3	Display for 1st Time Interval	10	Humidity display
4	Display for 2nd Time Interval	11	Display When Breakdown & Maintenance Required
5	Display during Running	12	Insufficient Water Supply
6	Display when Stop	13	Specific Week Day
7	Numerical Value (Temp. /Time)	14	Display for Misting / Rest

5.5 How to Operate the Misting Controller

5.5.1 Remote Controller, Buzzer, Function key Description

5.5.1.1 Push ON/OFF one time => Shot down LCD, all function stop, and RY3 will not stop until all procedure finish.

5.5.1.2 In any case when power on, press "Run-Key" on remote control to activate the machine.

5.5.1.3 In any case when power on, press "Stop-Key" on remote control to shut down the machine.

5.5.1.4 To adjust the volume of buzzer: First, please press stop button to stop the machine , then press ▲ UP-KEY or ▼ DOWN-KEY for 2 seconds to start the function after hearing a buzzing.

- Press up /down button to increase/decrease the volume.

5.5.2 Power on and LCD Back-light Description

5.5.2.1 After push main On/OFF button, the back light of the LCD is on for 3 seconds and keeps status as below：

- The machine is under STOP status, then as STOP.
- The machine is under stand by or activating status, then as its original status before stop the machine.

5.5.2.2 After power on, the back light will be off if no further operation is executed within 30 seconds.

■ Note：Before shot down the machine or LCD control box (include abnormally shot down), the unit is recommended to be set as STOP in case any risk may occur.

5.5.3 ON/OFF ON/OFF-KEY Description：(not the main external power supply switch)

5.5.3.1 When machines stand by or activating, push ON/OFF button one time =>LCD back light off and all functions shot down.

5.5.3.2 When the machine is power off, push ON/OFF button one time=> power on the machine, and back light of the LCD is on.

5.5.3.3 The ON/OFF button is the only button with the function to shot down the machine (even the external POWER SUPPLY is on).

5.5.4 RUN/STOP RUN/STOP-KEY Description

5.5.4.1 While the machine STAND BY, push RUN/STOP one time =>Activate the machine, LCD shows a flashing “RUN”.

5.5.4.2 While the machine is running, push RUN/STOP one time =>the machine STOP and become STAND BY, LCD shows a flashing “STOP”.

5.5.5 

MODE-Key Description

5.5.5.1 When the machine is running, this key does not work.

5.5.5.2 When the machine is in the status of STOP/STAND BY, the user can push the MODE key and revolve the mode in 1 → 2 → 3 → 4 → 5 → 6 → 1 sequence.

5.5.6 

ENTER-Key, UP-Key, DOWN-Key Description

Select the right function key to set up mode/function, push UP-key and/or DOWN-key to adjust right figure, then push ENTER key to confirm the selection.

5.5.7 

TEMP-KEY：(The default set is off)

5.5.7.1 When the machine is in STOP status, push the TEMP-key one time and activate/disable temperature monitoring function.
Push the TEMP- key and revolve the mode in Activating temp monitoring → disable temp monitoring → activating temp monitoring (sequence).

5.5.7.2 The LCD display the temperature monitoring function as below：

- When users activate the temperature monitoring function, the numerical value light up and "°C" flash.
- When users disable the temperature monitoring function, the numerical value and "°C" both light out.

5.5.7.3 When the machine is in stop status, push the TEMP- key for 3 seconds and LCD will show flashing numerical value and a light-up "°C ".
Adjust the setting temperature by pushing UP or DOWN keys.

- Push  UP-key：10 → 11 → 12 → ⋯→ 60
- Push  DOWN-key：60 → 59 → 58 → ⋯→ 10
- After select the temperature, either push TEMP key one time or wait for 15 seconds to confirm the setting.

5.5.7.4 The temperature monitoring function works as below：

Activate the machine：When the ambient temperature is equal to or higher than the set temperature plus 2 degree, the "°C" will flash.

5.5.7.5 The setting range is between 10°C (50°F) ~ 60°C (140°F) and default value is 29°C (84°F).

5.5.7.6 The highest sensible temperature is 65°C (150°F).

5.5.7.7 The temperature monitoring function apply to all modes.

OPERATING

5.5.8 

HUMIDITY-KEY：(The default set is off)

5.5.8.1 When the machine is in STOP status, push the key one time and activate/ disable humidity monitoring function.

Push the HUMIDITY- key and revolve the mode in Activate humidity monitoring → disable humidity monitoring→ activating humidity monitoring sequence.

5.5.8.2 The LCD display the humidity monitoring function as below：

- When users activate the humidity monitoring function, the numerical value light up and "%" flash.
- When users disable the humidity monitoring function, the numerical value and"%" both not flash.

5.5.8.3 When the machine is in stop status, push the key for 3 seconds and LCD will show flashing numerical value and a light-up "%".

Adjust the setting humidity by pushing UP or DOWN keys

- Press ▲：30 → 35 → 40 → ⋯→ 95
- Press ▼：95 → 90 → 85 → ⋯→ 30

5.5.8.4 After select the humidity, either press HUMIDITY key one time or wait for 15 seconds to confirm the setting.

5.5.8.5 The humidity monitoring function works as below：

- The temp monitoring function is prior to humidity monitoring function.
- Activate the machine：When the ambient humidity is equal to or lower than the set humidity minus 3%, the numerical value and "%" both flash.
- Stop the machine：When the ambient humidity is higher than the set humidity, the numerical value light out and "%" flash.

5.5.8.6 The setting range is between 30% ~ 95%. The default humidity is 70%.

5.5.8.7 The humidity monitoring function apply to all modes.

5.5.9 

MIST-KEY

5.5.9.1 When the machine is in STOP status, select mode 4 to set the mist time.

5.5.9.2 Set “Minute” by pushing UP or DOWN keys.

- Press ▲ : 00 → 01 ⋯→ 57 → 58 → 59
- Press ▼ : 59 → 58 ⋯→ 02 → 01 → 00

5.5.9.3 After setup the “Minute”, press ENTER for further “Second” setting by pushing UP or DOWN keys.

- Press ▲ : 00 → 01 ⋯→ 57 → 58 → 59
- Press ▼ : 59 → 58 ⋯→ 02 → 01 → 00

■ Note：If the “Minute” is set as 0, the setting interval for “Second” is 15 sec.

5.5.9.4 The MIST key will light up to show a misting status.

5.5.9.5 Push MIST key one time or wait for 15 seconds to confirm and quit the setting.

5.5.9.6 The default value is【One minute】and 【Zero second】.

5.5.10 

REST-KEY

5.5.10.1 When the machine is in STOP status, select mode 4 to set the rest time.

5.5.10.2 Set “Minute” by pressing UP or DOWN keys.

- Press ▲ UP-KEY：00 → 01 ⋯→ 57 → 58 → 59
- Press ▼ DOWN-KEY：59 → 58 ⋯→ 02 → 01 → 00

5.5.10.3 After setting "minutes", press Enter to make further "second" settings and set by pressing UP or DOWN key.

- Push ▲ UP-KEY 1下：00 → 01 ⋯→ 57 → 58 → 59
- Push ▼ DOWN-KEY 1下：59 → 58 ⋯→ 02 → 01 → 00

5.5.10.4 The REST key will light up to show misting interruption.

5.5.10.5 Press REST key one time or wait for 15 seconds to confirm and quit the setting.

5.5.10.6 The default value is 【One minute】and 【Zero second】.

5.5.11 Time TIME-KEY -The default value is【One minute】and 【Zero second】

5.5.11.1 No matter the machine is running or stop, the LCD will show the real time when user press Time key.

5.5.11.2 When the LCD is showing the real time, press TIME key one time or wait for 15 seconds, the system will go back to show temperature and/or humidity again.

When the machine is in STOP status, press TIME key to show the real time and then ENTER key to set the time.

- Push the ENTER key and revolve the module in WEEK → HOUR→ MINUTE →WEEK sequence.

5.5.11.3 Press UP key to add up as below：

- Week：SUN → MON → TUE → WED → THU → FRI → SAT →SUN (in sequence)
- Hour：00 → 01 → 02 → …→ 23 → 00
- Minute：00 → 01 → 02 → …→ 59 → 00

5.5.11.4 Press DOWN key to decrease progressively as below：

- Week：SUN → SAT → FRI → THU → WED → TUE → MON →SUN (in sequence)
- Hour：00 → 23 → 22 → …→ 01 → 00
- Minute：00 → 59 → 58 → …→ 01 → 00

5.5.11.5 Push TIME key one time or wait for 15 seconds to confirm and quit the setting.

5.5.12 Mode Definition of Misting Mode

- Mode 1：Misting 15 sec. and rest 20 sec.
- Mode 2：Misting 25 sec. and rest 30 sec.
- Mode 3：Misting 40 sec. and rest 40 sec.
- Mode 4：Programmable, refer to 5.5.9. and 5.5.10
- Mode 5：Weekly cycle set by user.
- Mode 6：Continuous Misting.

5.5.13 MODE 5 Weekly Cycle Setting：

5.5.13.1 When the machine is in STOP status, press Time key for at least 3 seconds to set the weekly cycle.

5.5.13.2 Set demand period (2 periods a day, totally 14 periods per week) by pushing ▲ UP or ▼ DOWN keys. The selected “weekday” will flash.

- The period revolve in sequence as: SUN → ◠ → ◡ → MON → ◠ → ◡ → TUE.
- Whenever select a specified period, the system will show RUN and STOP setting in sequence.

5.5.13.3 When you jump to the option you want to set, press Enter ENTER-Key to enter the period to set.

5.5.13.4 Use the up and down keys to select the "Hour" setting that you want to activate. The setting value will be displayed in flashes. After setting, press Enter ENTER-Key once.

5.5.13.5 Use the up and down keys to select the "Minute" setting that you want to activate. The setting value will be displayed in flashes. After setting, press Enter ENTER-Key once.

5.5.13.6 Use the up and down keys to select the "Hour" setting that you want to stop. The setting value will be displayed in flashes. After setting, press Enter ENTER-Key once.

5.5.13.7 Use the up and down keys to select the "Minute" setting that you want to stop. The setting value will be displayed in flashes. After setting, press Enter ENTER-Key once.

5.5.13.8 Save the setting and return to 5.5.13.2 to select another weekday and period.

5.5.13.9 There are two periods for every weekday. Period 1 ◠ , Period 2 ◡ .

5.5.13.10 The setting RUN and STOP data will not be saved until both options are set. Any time, when users press 

TIME key or wait for 15 seconds without setting new value during the setting procedure, the system will neglect current setting.

In order to save current setting, the time of weekday's RUN and STOP must be set completely. Then, please go back to weekday option before push TIME key or wait for 15 seconds to save the setting.

- The whole setting procedure is as below：SUN (whatever day) → RUN/STOP → Period options → HOUR setting → MINUTE setting → SUN

5.5.13.11 When Mode 5 activate, the machine display 5 under stand by status.

5.5.13.12 **The LCD will show X WEEK (X stand for current mode number as 0, 1, 2, 3, 4) under mode 5.**

5.5.13.13 When both Period 1 and Period 2 are selected, Period 1 is prior to Period 2 as the chart below shows.

Priority of the time within different period.

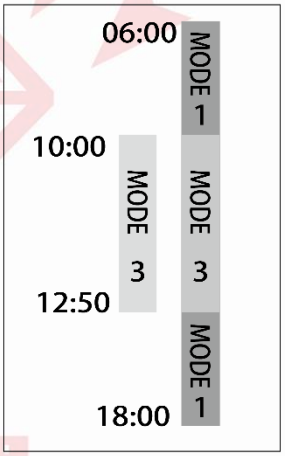

5.5.13.14 Attention：If the mode is selected as 0 in a specified period, the machine will not be activated.

5.5.13.15 The default value the manufacturer set:

DAY	SUN	MON	TUE	WED	THU	FRI	SAT	Remark
Period 1	08:00 ~11:30	08:00 ~11:30	08:00 ~11:30	08:00 ~11:30	08:00 ~11:30	08:00 ~11:30	08:00 ~11:30	Time of the period and mode can be set by user
Mode	1	1	1	1	1	1	1	
Period 1	13:30 ~17:30	13:30 ~17:30	13:30 ~17:30	13:30 ~17:30	13:30 ~17:30	13:30 ~17:30	13:30 ~17:30	
Mode	1	1	1	1	1	1	1	

5.5.14 Insufficient Water Supply Warning

5.5.14.1 When water supply is insufficient, the warning icon , will flash. The buzzer call one time for 0.5 second. The system STOP for standing by.

5.5.14.2 In order to relieve the WARNING, please check and eliminate the insufficient-water-supply condition. The system automatically detect the feed-in water, relieve the warning, and RUN the machine.

5.5.15 ENGINEERING MODE and MOTER Running Warning

5.5.15.1 When the machine is standing by, press Mode and Temp at the same time for 3 seconds, then the system enter into ENGINEERING MODE.

5.5.15.2 Whenever press Enter ENTER key, the option of ENGINEERING MODE revolve as 1 → 2 → 3 → 1 in sequence.

5.5.15.3 During setting, the system will go back to original frame either push MODE key one time or do nothing for 15 seconds. The data will be automatically saved before quit the mode.

5.5.15.4 When total running time reach up to 300 hours, the maintenance icon light up and the buzzer call for about 0.5 second. The action will not influence any function.

5.5.15.5 The way to relieve Maintenance Warning：After maintenance, enter into ENGINEERING MODE and go to mode 2, push DOWN key 3 seconds to cease the warning.

5.5.15.6 Operating Mode

Mode	Description	Setting Procedure
1	Celsius / Fahrenheit Alter	Push TEMP key one time to switch Celsius / Fahrenheit system. After change, the temperature monitoring standard will alter accordingly.
2	Total Running Time for MOTOR	Push DOWN key 3 seconds, then the existed running time will be eliminated (normally, be set after maintenance)
3	Sum up of the Total Running Time of the System	The sum up value can't be renew. If the user change machine's motor or pump, please check with the dealer to return to ZERO.

6. Trouble Shooting

⚠ DANGER Before troubleshooting, please turn off the power before performing maintenance work to prevent electric shock.

Problem	Probable Cause	Solution
No mist come out of nozzle	• The misting nozzle get blocked. • Air exist in the pipe line. • Air get into the pump. • The valves worn out or the pump is clogged with rubbish. • Misting nozzle worn out.	• Clean the nozzle, if it doesn't work, change the nozzle. • Let go the air. • Tighten all joints connected to the water inlet. • Check or change the O-ring of all joints if necessary. • Change or clean the valves, then reset the pump. • Change misting nozzle.
The pump is fail to absorb water	• No water supply. • The valves worn out or the pump is clogged with rubbish. • Air get into the pump. • The water filters is blocked. • The seals or packings inside the pump worn out.	• Turn on the water faucet. • Change or clean the valves, then reset the pump. • Tighten all joints connected to the water inlet. • Check or change the O-ring of all joints if necessary. • Clean the water filters. • Replace the worn out seals or packings.
Unstable output pressure	• The pump's regulator worn out or get stuck. • The pump's valves worn out. • The seals or packings inside the pump worn out.	• Dismantle the regulator, clean and/or change related parts if necessary. • Change valves. • Replace the worn out seals or packings.
Abnormal noise or vibration	• The lubrication ability from oil is insufficient. • Water pipe and nozzle circuit get blocked. • Water supply (include inlet pressure) is abnormal.	• Add or change oil. • Clean or change nozzle and/or water pipes. • Check water supply line, clean or reset it.
Oil or water leaks	• The seals or packings inside the pump worn out or are damaged.	• Replace the worn out or damaged seals or packings.
Motor cannot run	• The voltage of the power supply is not stable. • The wire extend too long, and cause voltage and current drop. • The built-in thermos switch activates to protect the motor. • The setting of the control panel restrains the motor.	• Apply a constant voltage regulator and/or shorten the extension of the power cable. • Check the operating pressure is within a proper range. • Run the machine in a ventilation space. • Refer back to the manual and check all setting are correct.

7. Maintenance

7.1 Periodic Check and Inspection

Items	Period				
	Before operation	50hr	100hr	200hr	300hr
Main Machine Structure					
Check All Components Tightened	◆				◆
Check Water Line without Leakage	◆				◆
Check Pump Oil without leakage	◆				◆
Abnormal Sound and Vibration Check	◆				◆
Frame and Cover Damage Inspection	◆				◆
Important & Safe label Check	◆				◆
Hose/Pipe					
Check Connectors and Hoses Damage or Loosen	◆			◆	
Check and Clean Inlet Water Filter	◆			◆	
Check Nozzle Leaking or Blocked	◆			◆	
Electric Wire					
Check Power Circuit Damage or not	◆			◆	
Check Electric Cord Loosen or not	◆			◆	
Accessory hose					
Check and clean the Pressure Regulators					◆
High Pressure Pump					
Check Oil Quantity	◆		◆		
Change Oil Quality		◆ (Only for the first time)			◆
Check pressure Relief Valve					◆
Change the Oil Seal					◆
Check the Plunger					◆
Motor					
Check the Isolation on the Motor					◆

⚠ DANGER Before doing check, make sure that power has been off.

⚠ WARNING The mark of means that the item have to use professional skill and tools to measure.

⚠ CAUTION

- The interval mentioned above does not means to the time of durability.
- The checking list is only for reference, actual change time should be judged by frequency of use.

7.2 The Procedure for Oil Change

⚠ DANGER In order to avoid any possibility of getting electric shock, please power off the machine before doing any maintenance or inspection.

⚠ CAUTION

- Without regular maintenance and failure to change the oil regularly or replace the oil that does not meet the requirements, will cause damage to the machine parts or shorten the service life.
- When changing the engine oil, please make sure to remove the old oil, otherwise too much old oil will be mixed, which may affect the quality of the new oil or deteriorate.
- Please make sure change the oil when the engine is cold, and the pump must be kept in a horizontal. The angle of inclination should not exceed 5° in all directions to avoid oil expansion and misjudgment of oil level.

7.2.1 Open the discharge cock at the end of the nozzle circuit, and clean the whole pipe system.

7.2.2 Remove the water supply hose and high pressure misting hose, then wipe all components.

7.2.3 Check the bottom of the machine to see if there is any leakage of oil from pump body.

7.2.4 Check the oil inside the pump. If the oil quantity is inadequate, refill it. If the quality of oil is not good (oil shows white color or too dirty and/or viscos), Change it.

7.2.5 Oil must be changed after first 50 hour operation, and then be changed every 300 hour running. Use gear oil VG68 or equivalent. The amount of oil added each time depends on the model, but it must be between the low point to the middle point of the oil detection lens .The oil capacity is around 120ml or 150 ml (**ISO VG68、VG 100 or SAE GEAR 80W90**).

- **Model ECO Cool 1 / ECO Cool 2 Please add about 120 ml of oil.**
- **Model ECO Cool 3 / ECO Cool 5 Please add about 150 ml of oil.**

7.2.6 The oil replacement procedure is as follows:

7.2.6.1 Remove the refill screw on the top of the pump (let go the air and help to drain out the oil).

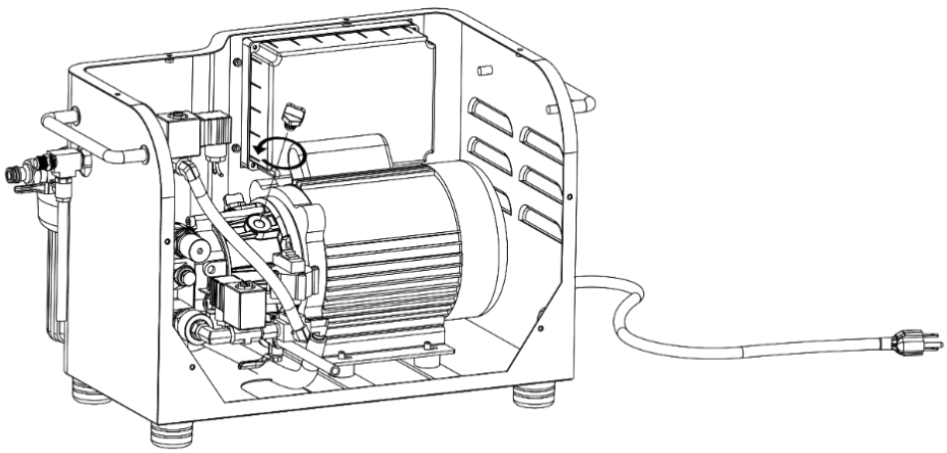

7.2.6.2 Prepare a vessel to collect aged oil before open drain cock in the bottom of the pump.

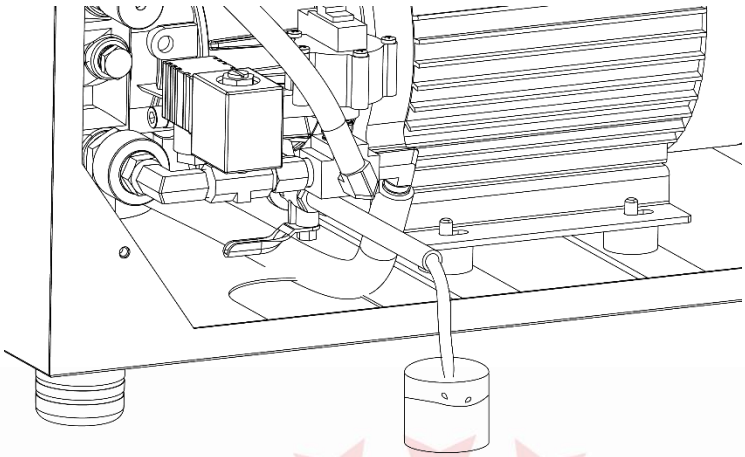

7.2.6.3 Close the drain cock, then add oil through refill hole.

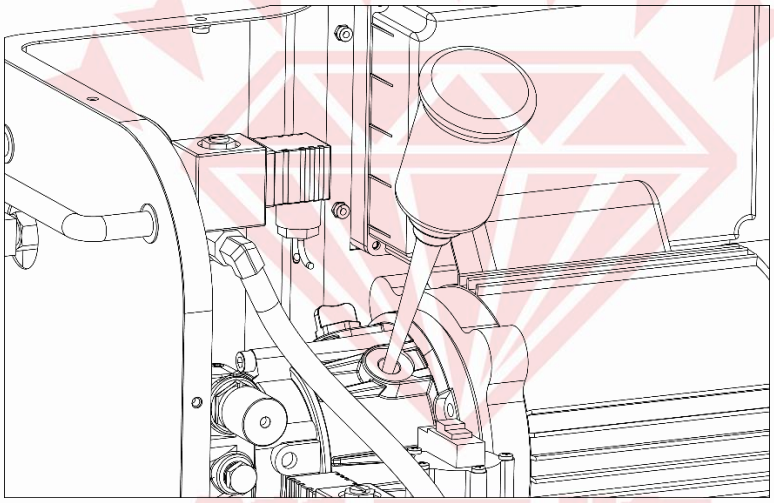

7.2.6.4 Tighten the refill screw.

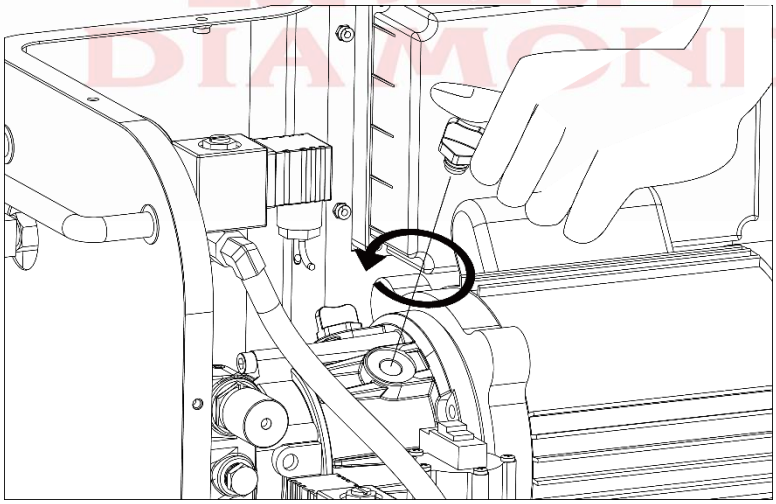

7.2.7 After maintenance, Please recheck all bolts, screws and connectors are all tighten and fixed firmly.

⚠CAUTION If the screws are not locked properly, it will cause damage to the machine parts or shorten the service life of the product.

7.3 The Procedure of Changing Filter Cartridge

⚠CAUTION

- Please check the inlet water filter every 500 running hours or every three months.
- Change the filter cartridge if the filter get blocked or is too dirty.
- If the user adds one more filter himself, the manufacturer recommend that change the first filter cartridge (from water faucet side) every three months and six months for the second one.

7.3.1 Use the special spanner to turn the filter housing anticlockwise, then remove the housing.

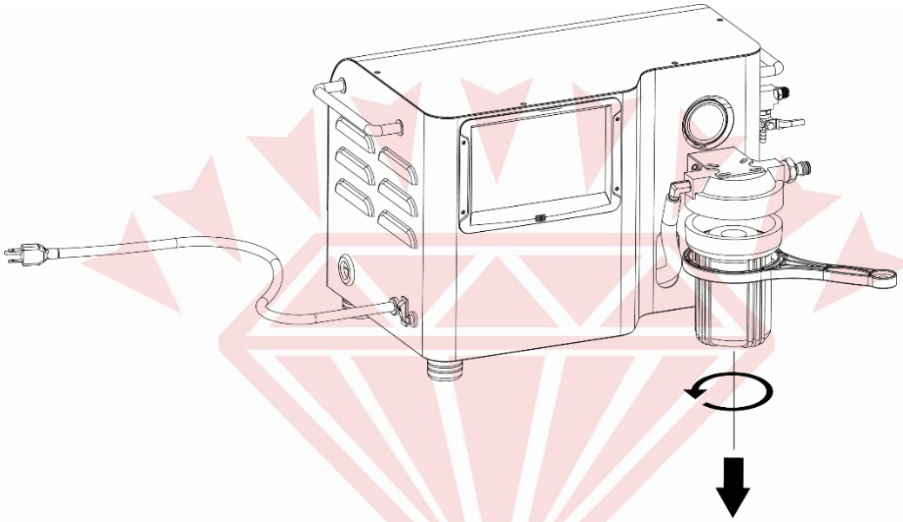

7.3.2 Replace the filter cartridge with a new one, then turn the housing clockwise to fix the filter back with the spanner.

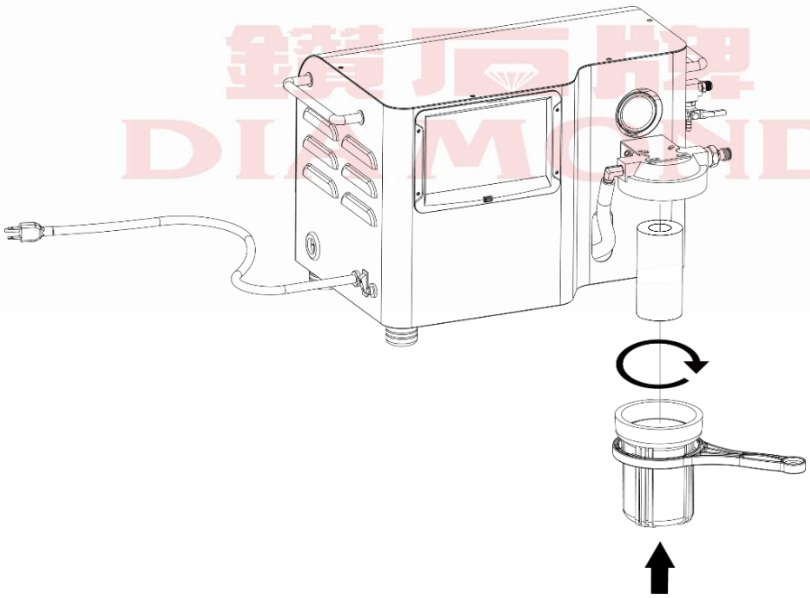

7.4 The time to change oil and attention

Question	Reason	Method
The effect of oil selection, time of change and working environment on machine.	• For changing the oil, it should follow the regulation of using hour or regular interval. Overdue or expired will cause components damage because of lack of lubricity.	• Change oil regularly or whichever occurs first. (see Chapter 7.5)
	• 1. Using improper or inferior quality oil (e.g. recycle oil) cannot achieve proper lubricant function and components protection. • 2. If used oil is not drained completely whenever changing oil, the left impurities of used oil will be dissolved in new oil. That will accelerate the oil deterioration. • 3. Please do not mix up with different group oil because their chemical composition and additives are different. Mixed oil could cause deterioration. • 4. Please avoid using PAG oil. a. Most common rubber and plastics are closed to polarity that will be affected by PAG, led to swell or shrinkage. b. The paint will be eroded and then peeled off by PAG oil. c. Light metals (e.g. Aluminum alloy) will be eroded or cracked by PAG under the effect of stress. d. PAG oil is hydrophilic; thus, water cannot be filtered out by filtering system.	• 1.1 Please choose good quality oil sold from us or other qualified brands. Please avoid using inferior oil such as recycled oil. • 2.1 Whenever the time of changing oil, please ensure the used one is as drained as possible for the quality of new oil. • 3.1 For replacing oil with different group oil, the used one needs to be drained completely and then washing the oil tank with replaced oil before refill it. • 4.1 Please avoid using PAG oil.

Question	Reason	Method
The effect of oil selection, time of change and working environment on machine.	1. The interval between the highest and the lowest temperature will directly affect the liquidity and lubricity of oil. 2. Under wretched work environment (e.g. heat, stuffy, directly exposed under sunlight or rain, dusty, high humidity, bad air quality), the selection of oil and time of changing oil will directly affect the maintenance and lubricity of the machine.	• 1.1 Please select the oil with adequate viscosity according to workplace environment in order to have best lubricity and protection. (see Chapter 7.6) • 2.1 The time of changing oil is based on regular operation. Operator should consider the affection of workplace, temperature and humidity for increasing or decreasing the interval of changing oil, and should also shorten the interval, depending on the condition of the liquidity, impurity, odor and deterioration.
	1. If the operator uses the machine under constant overpressure, it will lead to losing of oil lubricity rapidly. 2. If the machine is left unused for long time or only used rarely. It will lead to oil deterioration by oxidation, or even cause internal components rusted.	• 1.1 If operational condition is strict such as operation in constant overpressure, then the interval of changing oil should be shortened. ※ The performance of machine is limited. Overpressure operation will lead to component damage and then reduce life of machine. Please follow the instructions of pressure specification for the sake of long- term use. • 2.1 Please change the oil regularly when the machine remains unused for long time. • 2.2 If the machine needs to be used after long-term unused status, please check the internal components and also change oil. • 2.3 If the components are rusty, please do not use it and return it to the manufacturer.

7.5 Oil Changing Interval (hours or months

Oil Type / Interval / Frequency	Above VG68 Mineral base	Above VG68 Semi synthetic base	Above VG68 synthetic base	Remark
First time use	50 hr. or 1 month	50 hr. or 1 month	50 hr. or 1 month	• First time use is for component running in period result in scraps. It is important to change oil.
Monthly average 8 hr. /days above	500 hr. or 2 months	600 hr. or 2.5 months	700 hr. or 3 months	• For reference only. The affection of workplace and environmental elements also should be considered.
Monthly average 2 hr. /days above	300 hr. or 1.5months	400 hr. or 2 months	500 hr. or 2.5 months	• For reference only. The affection of workplace and environmental elements also should be considered.
Monthly average 8 hr. /days below or only use occasionally	100 hr. or 1 month	200 hr. or 1.5 months	300 hr. or 2months	• For reference only. The affection of workplace and environmental elements should be considered.
Left unused for long time	Once every 2 months	Once every 3 months	Once every 4 months	• If the machine is left unused for long time. It will lead to oil deterioration by oxidation, or even causes internal components rusted. • If the machine needs to be used after long-term unused status, please check the internal components and change the oil. If the internal components are rusty, please do not use it and then return to the manufacturer.

7.6 Oil Selection

Please select the oil with adequate viscosity according to workplace environment in order to have best lubricity and protection.

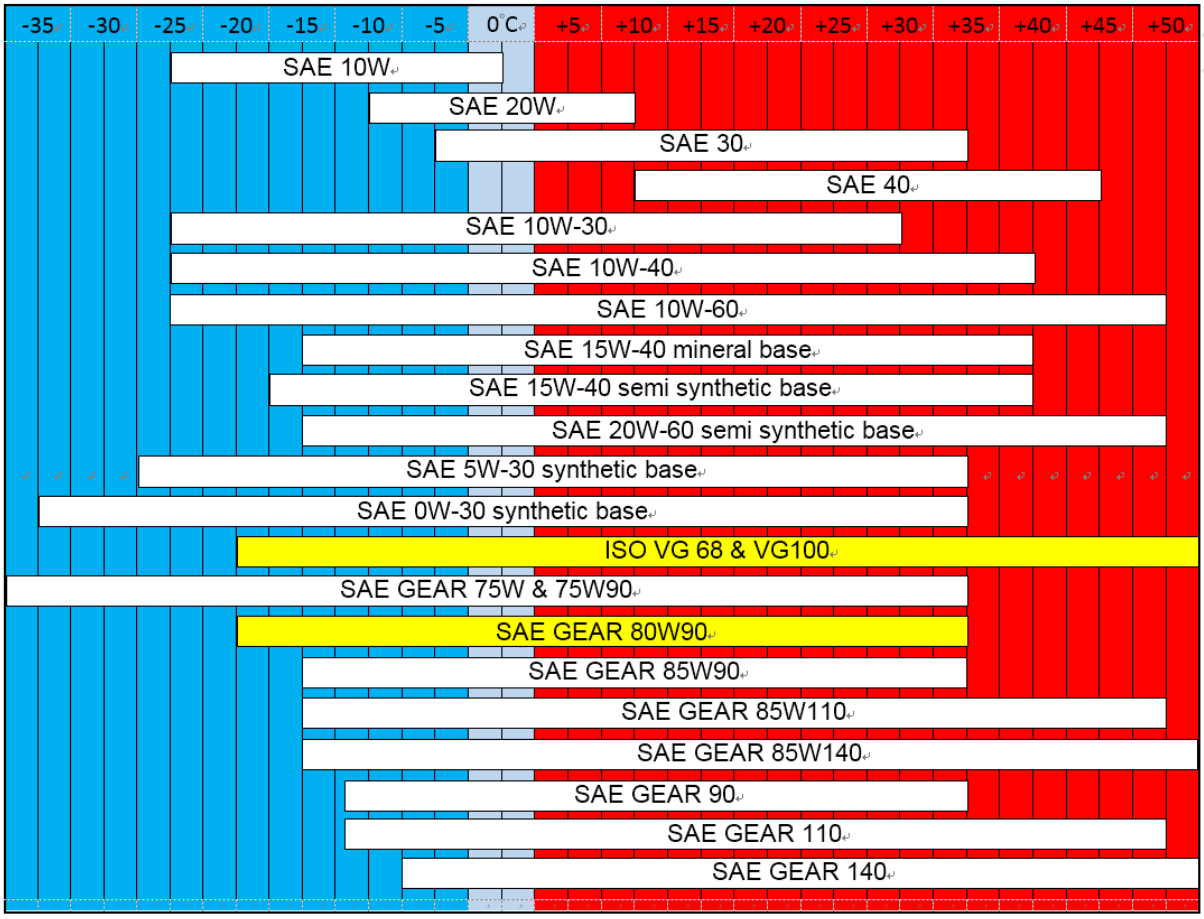

Viscosity Classification Equivalents

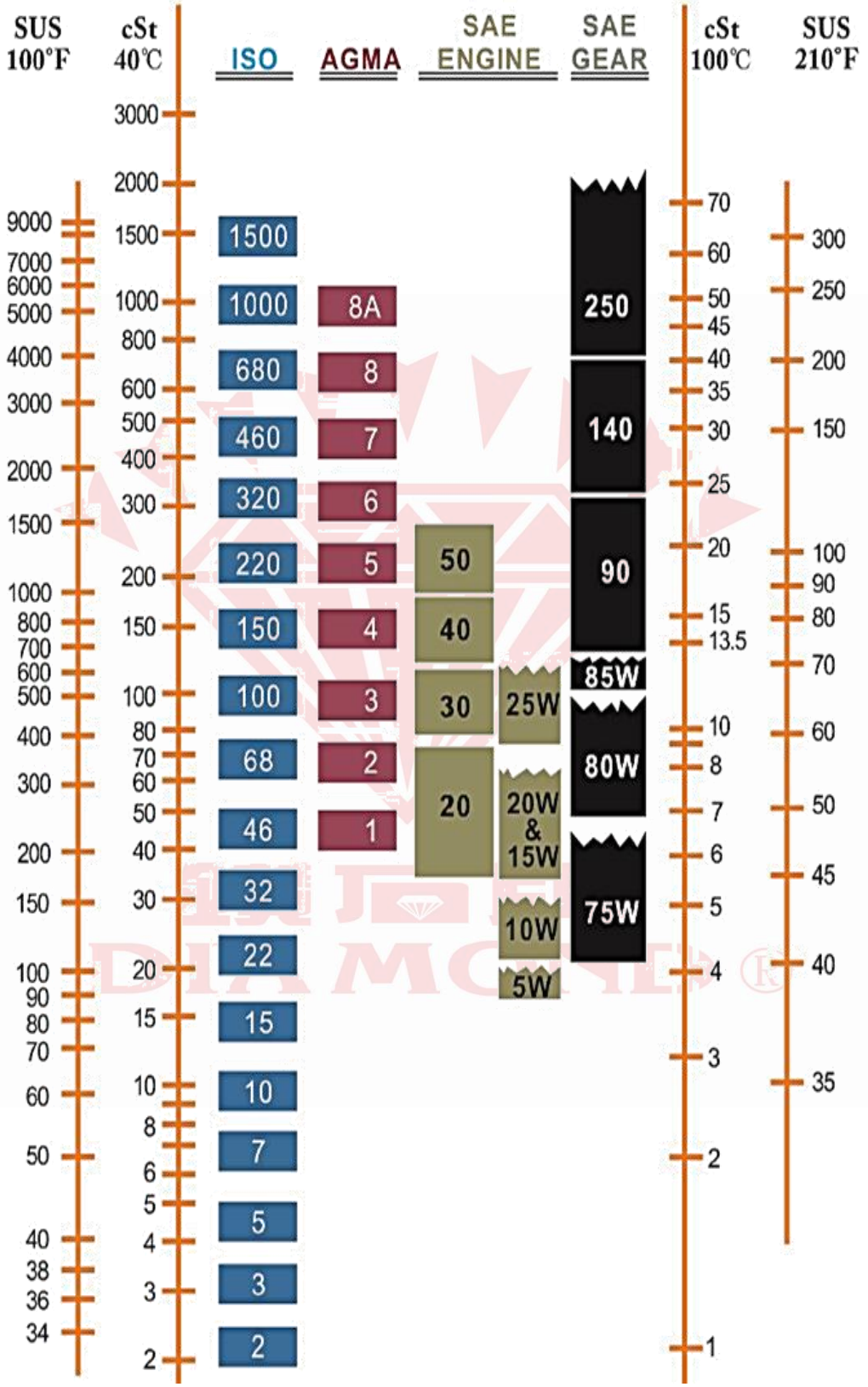

Maintenance

8. Warranty

⚠ DANGER **Please read the Operating manual carefully before use.**

8.1 Warranty content：If the original parts that constitute the product are not suitable in terms of materials and manufacturing, please apply for warranty in accordance with the period and conditions indicated in this manual.

Warranty is based on the exchange or repair of parts, and the unsuitable parts removed will be owned by Tanong Precision Technology Co., Ltd.

8.2 Warranty period：The warranty period is within one year from the delivery date.

8.3 Non-warranty items：

- Modifications and changes that our company does not recognize.
- Exceed the usage limit indicated by our company.
- Failure to regularly inspect or fail to comply with prohibited matters or storage methods.
- The machine is repaired by untrained or unauthorized personnel when it is break down.
- Use non-original parts and other brand oils (lubricating oil) other than the original oil.
- Damage caused by natural phenomena such as natural rust caused by time changes and natural disasters such as earthquakes.
- Additional costs incurred due to the unsuccessful use of the machine (such as: losses caused by closure, costs of renting other machines and operating losses, etc.)
- There is no effect on the function, and the abnormality is judged based on the feeling alone (sound, vibration and slight scratches on appearance, etc.)
- The cause of the machine failure is because user didn't used according to our "Operation Manual".
- Filters, nozzles, pressure, high pressure pipes, oil seals and other related consumables.

⚠ CAUTION

- When requesting warranty, be sure to show this warranty, otherwise, the warranty repair will not be provided.
- When the machine is placed in an environment containing asbestos, dangerous dust, or in an environment where radiation may explode, these environments may cause health hazards to repairers, so warranty repairs cannot be accepted in these dangerous environments.

diamond

Quality Assurance Certificate

Name： **Systemic Misting Machine**

Model： **ECO COOL II**

Serial Number：

Date of purchase： Date Month Year

1. This product is made through strict quality management and inspection process.
2. When there is an abnormality in this product, free after-sales service can be obtained within 1 year after installation.
3. Even if the quality guarantee period is not exceeded, the following items will still be charged for the service (repair fee + parts fee + travel fee, etc.)
   - Failure caused by improper maintenance and repair.
   - Natural disasters (fire, flood and others).
   - Failure or damage caused by falling, etc. after installation.
   - The life of the part itself is exhausted (filter, etc.)
   - Unspecified matters, as stated in the warranty terms.
4. This warranty must be presented when repairs are required.

Service Application

1. Before contacting, please reconfirm the usage method in the instruction manual and the inspection items at the time of failure.
2. If the abnormality still exists after confirmation, please stop using it and consult the sales office or the company.

合格 TANONG 大農精密科技股份有限公司 品保部

Q.C. Certification： _____ Q.A. Supervisor： _____

Follow us on

Scan and get more info

Tanong Precision Technology Co.,Ltd.

No.6,Feng Ming Rd., Ta-ya Dist., Taichung,Taiwan R.O.C.42872

TEL: +886-4-25662106 FAX: +886-4-25662109

E-mail: Info@tanong.com.tw

http://www.tanong.com.tw